6 Synthesis of Optical Fields Characterized by Their Mutual Intensity Functions

M. Alper Kutay
The Scientific and Technical Research Council of Turkey
National Research Institute of Electronics and Cryptology

Haldun M. Ozaktas
Bilkent University (Turkey)

Serdar Yüksel
University of Illinois at Urbana-Champaign (USA)

6.1 Introduction

In some applications we want to synthesize a discrete signal from another discrete signal by designing a system that maps the signal we have to the desired one. The problem of obtaining a specific output $\mathbf{g}$ corresponding to a specific input $\mathbf{f}$ is not an interesting problem if all entries of $\mathbf{f}$ are nonzero, because we may recover $\mathbf{g}$ from $\mathbf{f}$ by using only a single multiplicative filter $\mathbf{h}$. However, in the event that some of the entries of $\mathbf{f}$ are zero, the problem is no longer trivial and a number of iterative algorithms have been proposed. A distinct problem arises when, rather than specifying a specific output for a specific input, an input-output relation is specified. This is the *system synthesis* problem, as opposed to the *signal synthesis* problem. If some information is available about the input (in some statistical form), and we want to synthesize an input-output relation represented by the system matrix $\mathbf{H}$, the problem may be posed as the following minimization problem

$$\min E\left(\|\mathbf{Hf} - \mathbf{Tf}\|^2\right), \tag{6.1}$$

where $\mathbf{T}$ represents a matrix that is constrained to correspond to some efficiently realizable form. For example, we may want to implement the desired input-output relation with a Fourier domain filter, which is easy to realize efficiently. Then $\mathbf{T}$ would be constrained to the form $\mathbf{T} = \mathbf{F}^{-1}\mathbf{\Lambda}\mathbf{F}$, where $\mathbf{F}$ is the Fourier transform matrix, $\mathbf{\Lambda}$ is a diagonal matrix, and Eq. (6.1) is minimized with respect to $\mathbf{\Lambda}$. Another synthesis problem involves synthesizing an input in order to produce a desired output. Despite the different interpretation, this problem is mathematically

identical to the problem of signal recovery: We have an output, which may be interpreted as the desired signal, and we try to recover the input, which may be interpreted as the signal to be synthesized.

Many synthesis problems arise in optics. One important problem is synthesizing a desired optical field from a given source when both are characterized by their statistical properties. The most commonly used statistical descriptions of light are the second-order expectations known as coherence functions.[1] There are two kinds of coherence: temporal and spatial. Temporal coherence is concerned with the ability of a light beam to interfere with a delayed version of itself. Spatial coherence characterizes the ability of light to interfere with a spatially shifted version of itself. When both factors are simultaneously taken into consideration, we are led to the concept of the mutual coherence function.[1,2] A random optical wave that exhibits arbitrary spatial and temporal coherence properties can be characterized by its mutual coherence function[1] defined as:

$$\Gamma_f(\boldsymbol{\rho}_1, \boldsymbol{\rho}_2, t_1, t_2) = \langle f(\boldsymbol{\rho}_1, t_1) f^*(\boldsymbol{\rho}_2, t_2) \rangle, \tag{6.2}$$

where $f(\boldsymbol{\rho}, t)$ is the complex amplitude of the optical signal, $\boldsymbol{\rho}$ and t are the spatial and temporal variables, the angle brackets $\langle\ \rangle$ denote the ensemble average over realizations of the fluctuating optical field, and $(\ )^*$ denotes complex conjugation. In this chapter we restrict our attention to quasi-monochromatic conditions in which temporal coherence effects can be ignored and the coherence function can be reduced to

$$J_f(\boldsymbol{\rho}_1, \boldsymbol{\rho}_2) = \langle f(\boldsymbol{\rho}_1) f^*(\boldsymbol{\rho}_2) \rangle, \tag{6.3}$$

which is known as the mutual intensity function.

The basic problem we deal with in this chapter is symbolically depicted in Fig. 6.1. We assume we have a quasi-monochromatic light source with given mutual intensity $\mathbf{J_f}$. We wish to design the system $\mathbf{H}$, possibly subject to certain constraints to ensure efficient realization such that the output mutual intensity $\mathbf{J_g}$ satisfies as closely as possible the given specifications. We employ a discrete formulation because this leads to a simple matrix-algebraic formulation without the distractions accompanying discussions of continuous function spaces. One-dimensional notation is employed for simplicity, although it is easy to generalize the results to two-dimensional problems as well. Our goal is to solve for the necessary optical system $\mathbf{H}$ and to synthesize it efficiently.

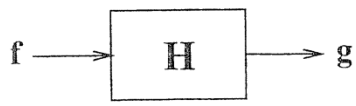

Figure 6.1 The mutual intensity synthesis problem.

We will first define a number of matrices that characterize the second-order correlations of a field and discuss important properties of these matrices. We will also discuss the limiting cases of fully incoherent and coherent light and propose a definition to measure the scalar degree of partial coherence of light. We will then focus on our main problem of synthesizing light of desired mutual intensity. Since this problem is quadratic, we will employ the singular-value decomposition, which reduces this quadratic problem to a linear one. We then propose the use of fractional Fourier domain filtering circuits introduced in Refs. [13], [14], and [23]–[26] to efficiently implement the necessary optical system.

6.2 Correlation Matrices and Their Properties

For one-dimensional random optical fields, the mutual intensity function can be written as

$$J_f(x_1, x_2) = \left[f(x_1) f^*(x_2)\right]. \tag{6.4}$$

Let $\mathbf{f} = [f(1), f(2), \ldots, f(N)]^{\mathrm{T}}$ be a vector representing the continuous field $f(x)$ such that the elements of $\mathbf{f}$ are obtained by sampling the complex optical field $f(x)$. Here, N is the space-bandwidth product of $f(x)$. Analogous to Eq. (6.4), the mutual intensity matrix $\mathbf{J_f}$ of $\mathbf{f}$ is then defined as

$$\mathbf{J_f} = \langle \mathbf{f}\mathbf{f}^{\mathrm{H}} \rangle, \tag{6.5}$$

where the angle brackets denote ensemble averaging and the superscript H denotes Hermitian transpose. We will simply write $\mathbf{J}$ instead of $\mathbf{J_f}$ when there is no room for confusion. The diagonal elements of $\mathbf{J}$ correspond to the intensity of the field, and their sum is the energy. We will use the notation $J(m, n)$ to represent the elements of the matrix $\mathbf{J}$. Referring to the theory of random processes, $\mathbf{J}$ is an autocorrelation matrix.

We now state some elementary but important properties of $\mathbf{J}$ that hold for any field $\mathbf{f}$:

1. As a direct consequence of its definition [Eq. (6.5)], $\mathbf{J}$ is known to be Hermitian symmetric and positive semidefinite:

$$\mathbf{J} = \mathbf{J}^{\mathrm{H}} \quad \text{and} \quad \mathbf{v}^{\mathrm{H}}\mathbf{J}\mathbf{v} \geq 0 \quad \text{for any vector } \mathbf{v}.$$

   Due to Hermitian symmetry and positive semidefiniteness, all eigenvalues of $\mathbf{J}$ are real and nonnegative.
2. $|J(m, n)|^2 \leq |J(n, n)|\,|J(m, m)|$.
3. Eigenvectors corresponding to distinct eigenvalues will always be orthogonal. Furthermore, as with any Hermitian symmetric matrix, a complete set of orthogonal eigenvectors can always be found even when there are de-

generate eigenvalues. As a consequence, $\mathbf{J}$ can be diagonalized by a unitary matrix $\mathbf{U}$ ($\mathbf{U}\mathbf{U}^{\mathrm{H}} = \mathbf{U}^{\mathrm{H}}\mathbf{U} = \mathbf{I}$) whose columns are the eigenvectors of $\mathbf{J}$:

$$\mathbf{J} = \mathbf{U}\mathbf{\Lambda}\mathbf{U}^{\mathrm{H}}. \tag{6.6}$$

Here, $\mathbf{\Lambda}$ is a diagonal matrix of real eigenvalues of $\mathbf{J}$ greater than or equal to zero. The above representation is just the singular-value decomposition of the matrix $\mathbf{J}$[3]. It can also be written as

$$\mathbf{J} = \sum_{k=1}^{R} \lambda_k \mathbf{u}_k \mathbf{u}_k^{\mathrm{H}}, \tag{6.7}$$

where $\mathbf{u}_k$ is the kth column of $\mathbf{U}$, λ_k is the eigenvalue corresponding to $\mathbf{u}_k$, and R is the number of nonzero eigenvalues.[3] Note that each $\mathbf{u}_k$ is orthogonal to the other since $\mathbf{U}$ is a unitary matrix. This expression is sometimes referred to as the spectral expansion of $\mathbf{J}$. It is also known as the *coherent-mode representation* in optics[5] because each term corresponds to a coherent mode of light.[1]

4. If $\mathbf{J}$ can be expressed as the outer product of two vectors $\mathbf{u}'$ and $\mathbf{u}''$ in the form $\mathbf{u}'\mathbf{u}''^{\mathrm{H}}$, then Hermitian symmetry implies that $\mathbf{u}'$ and $\mathbf{u}''$ must be parallel, so that by appropriate scaling $\mathbf{J}$ can be expressed in self-outer-product form $\mathbf{u}\mathbf{u}^{\mathrm{H}}$. That is, any Hermitian symmetric matrix that can be written in outer-product form can also be written in self-outer-product form.
5. The rank of $\mathbf{J}$ is equal to the number of nonzero eigenvalues.[3]

Sometimes it is more convenient to work with the normalized version $\mathbf{L}$ of $\mathbf{J}$[6]

$$L(m,n) = \frac{\langle f(m) f^*(n)\rangle}{\sqrt{\langle |f(m)|^2\rangle \langle |f(n)|^2\rangle}} = \frac{J(m,n)}{\sqrt{J(m,m)J(n,n)}}, \tag{6.8}$$

where $L(m,n)$ are the elements of the matrix $\mathbf{L}$. $\mathbf{L}$ is referred to as the complex coherence matrix.[6]

Since $\mathbf{L}$ is obtained by normalizing $\mathbf{J}$, the properties given above also hold for $\mathbf{L}$.[6] In addition to these properties, the following is also true: The diagonal entries of $\mathbf{L}$ are all equal to 1, $|L(m,n)| \leq 1$, and if $\mathbf{J}$ has unit rank, then all elements of $\mathbf{L}$ have unit magnitude. Conversely, if all elements of $\mathbf{L}$ have unit magnitude, positive semidefiniteness implies that $\mathbf{J}$ has unit rank.[6]

6.3 The Degree of Partial Coherence

In the previous section two different matrices that characterize the second-order statistics of a discrete random optical field were introduced and their properties were discussed. In this section we will examine the two extreme cases of random light—namely, fully incoherent and fully coherent light—in terms of these matrices. Later we will discuss a possible definition of a scalar measure of the degree of partial coherence of a field. Further details can be found in Ref. [6].

The statistical correlations of pairs of spatial samples of an optical field determine the degree of coherence or incoherence. A field is considered coherent if any two samples of the field are fully correlated, that is, they are just as correlated with each other as they are with themselves. A field is considered incoherent if any two distinct samples are fully uncorrelated, that is, the magnitude of their normalized correlation or covariance is zero.

First we consider fully coherent fields. Since any two samples of such a field must be fully correlated, the magnitude of their normalized correlation must be unity. This means that all of the elements of matrix $\mathbf{L}$ must have unit magnitude. In this case the matrices $\mathbf{J}$ and $\mathbf{L}$ both have unit rank, are of outer-product form, and consequently have only one nonzero eigenvalue.[6] The sole nonzero eigenvalue of $\mathbf{L}$ is equal to N. Thus, we can say that a discrete optical field is fully coherent if any of the following alternative conditions are satisfied:

1. All elements of the associated $\mathbf{L}$ matrix have unit magnitude:

$$|L(m,n)| = 1, \quad m,n = 1,\ldots,N; \tag{6.9}$$

2. The associated mutual intensity matrix $\mathbf{J}$ has unit rank;
3. $\mathbf{J}$ (or $\mathbf{L}$) has only one nonzero eigenvalue; and
4. $\mathbf{J}$ (or $\mathbf{L}$) is of outer-product form.

Next we consider fully incoherent fields. Since any two distinct samples of such a field must be uncorrelated, the mutual intensity matrix $\mathbf{J}$ and its normalized version $\mathbf{L}$ must be diagonal. In fact, $\mathbf{L}$ is the identity matrix. Therefore, we can say that a discrete optical field is fully incoherent if the following alternative conditions are satisfied:

1. The associated normalized mutual intensity matrix $\mathbf{L}$ is the identity matrix

$$\mathbf{L} = \mathbf{I}; \tag{6.10}$$

and

2. The associated mutual intensity matrix $\mathbf{J}$ is diagonal.

Though trivial, we also note that for the fully incoherent case, the matrix $\mathbf{L}$ is of full rank ($R = N$), and all of its eigenvalues are equal to unity. However, we should note that the $\mathbf{J}$ matrix for an incoherent field need not be full rank, nor does every full-rank matrix correspond to an incoherent field.

Based on the definitions of full coherence and full incoherence in terms of the correlation matrices, we can define a scalar measure of the degree of partial coherence of a field. This can be accomplished by interpolating any of the characteristics of the matrices in question.[6] There are many ways of constructing such interpolation functions, leading to several definitions of such a measure. Here we

will present one possible definition and refer the reader to Ref. [6] for other possible definitions and further discussion.

As already stated, incoherent light is characterized by all unity eigenvalues and coherent light by one nonzero eigenvalue of the matrix $\mathbf{L}$. We also note that the eigenvalues of matrix $\mathbf{L}$ are all nonnegative and their sum is equal to N. Based on these, we can state that the more concentrated the eigenvalues are around the largest eigenvalue, the more coherent the light; and the more uniformly spread they are, the more incoherent the light. It is convenient to assume that in the general case the eigenvalues are ordered in decreasing order. Therefore, the following measure of the spread of the eigenvalues away from the largest eigenvalue (which has index $n = 1$) may be used as a measure of the degree of partial coherence:

$$c = \frac{1}{N} \sum_{n=1}^{N} (n-1)^2 \lambda_n. \tag{6.11}$$

When all eigenvalues of $\mathbf{L}$ are unity (incoherent light), we have $c = (N-1)(2N-1)/6$, and when there is only one nonzero eigenvalue (coherent light) we have $c = 0$. For convenience, we can define a new measure

$$c' = \frac{(N-1)(2N-1)/6 - c}{(N-1)(2N-1)/6} \tag{6.12}$$

so that $c' = 0$ corresponds to full incoherence and $c' = 1$ corresponds to full coherence.

6.4 Synthesis of Arbitrary Mutual Intensity Matrices

Having discussed the properties of matrices $\mathbf{J}$ and $\mathbf{L}$ and a definition for a measure of the scalar degree of partial coherence of light, we now turn our attention to the synthesis problem. Referring to Fig. 6.1, our problem is to design the system $\mathbf{H}$, possibly subject to certain constraints, such that the output mutual intensity $\mathbf{J_g}$ satisfies as closely as possible the given specifications.

Once the optimal system $\mathbf{H}$ is determined, there remains the problem of implementing it. One way of implementing such general linear systems is to employ matrix-vector product architectures or multifaceted architectures.[8] However, these approaches are not space-bandwidth efficient. If the input has a space-bandwidth product of N, these systems require an optical system with space-bandwidth product N^2 in order to realize an arbitrary linear system. To alleviate this inefficiency, we propose to employ the space-bandwidth efficient filtering configurations introduced in Refs. [13], [14], [25], and [26]. In order to efficiently implement $\mathbf{H}$ with these configurations, we can employ one of the following two approaches: (1) we can directly synthesize the optimal system $\mathbf{H}$ with such configurations; or (2) we can take the form of these filtering configurations as a constraint on the form of $\mathbf{H}$ and optimize over the free parameters of these configurations.[25]

Referring to Fig. 6.1, the output field $\mathbf{g}$ is related to the input field $\mathbf{f}$ through the discretized relation

$$\mathbf{g} = \mathbf{H}\mathbf{f} \tag{6.13}$$

and

$$g(m) = \sum_{n=1}^{N} H(m,n) f(n), \tag{6.14}$$

where N is the space-bandwidth product of the signals and $\mathbf{H}$ is an $N \times N$ matrix representing the optical system. For simplicity in notation, we will assume that the dimensions of the input and the output optical fields are the same, although the discussion and the solutions we will provide may easily be generalized to the rectangular case where the input and the output dimensions are different.

It is easy to show that the output mutual intensity is related to the input mutual intensity through the relation

$$\langle \mathbf{g}\mathbf{g}^{\mathrm{H}} \rangle = \langle (\mathbf{H}\mathbf{f})(\mathbf{H}\mathbf{f})^{\mathrm{H}} \rangle = \mathbf{H}\langle \mathbf{f}\mathbf{f}^{\mathrm{H}} \rangle \mathbf{H}^{\mathrm{H}} \tag{6.15}$$

and

$$\mathbf{J}_{\mathrm{g}} = \mathbf{H}\mathbf{J}_{\mathrm{f}}\mathbf{H}^{\mathrm{H}}. \tag{6.16}$$

Since the right-hand side of Eq. (6.16) is quadratic in the elements of $\mathbf{H}$, it is desirable to introduce a representation for the mutual intensity that makes this equation linear in $\mathbf{H}$. Thus, we now discuss the *square-root representation*, which will serve for this purpose.

Square-Root Representation: In Sect. 6.2 we discussed some important properties of the mutual intensity matrix $\mathbf{J}$. Based on these properties, it is possible to show that $\mathbf{J}$ may always be expressed in the form (see Ref. [3])

$$\mathbf{J} = \tilde{\mathbf{J}}\tilde{\mathbf{J}}^{\mathrm{H}}. \tag{6.17}$$

To show this, we first define $\mathbf{\Lambda}^{1/2}$ to be the diagonal matrix whose elements are equal to the nonnegative square roots of the elements of $\mathbf{\Lambda}$ [Eq. (6.6)]. Then we can write $\mathbf{\Lambda} = \mathbf{\Lambda}^{1/2}\mathbf{U}^{\mathrm{H}}\mathbf{U}\mathbf{\Lambda}^{1/2}$ since $\mathbf{U}^{\mathrm{H}}\mathbf{U}$ is equal to the identity matrix. It follows that

$$\mathbf{J} = \mathbf{U}\mathbf{\Lambda}\mathbf{U}^{\mathrm{H}} = \left(\mathbf{U}\mathbf{\Lambda}^{1/2}\mathbf{U}^{\mathrm{H}}\right)\left(\mathbf{U}\mathbf{\Lambda}^{1/2}\mathbf{U}^{\mathrm{H}}\right) = \tilde{\mathbf{J}}\tilde{\mathbf{J}} = \tilde{\mathbf{J}}\tilde{\mathbf{J}}^{\mathrm{H}}, \tag{6.18}$$

where we have defined $\tilde{\mathbf{J}} = \tilde{\mathbf{J}}^{\mathrm{H}} \equiv \mathbf{U}\mathbf{\Lambda}^{1/2}\mathbf{U}^{\mathrm{H}}$. Thus, the mutual intensity matrix $\mathbf{J}$ is related to the *positive semidefinite square-root representation* $\tilde{\mathbf{J}}$ through the relation

$$\mathbf{J} = \tilde{\mathbf{J}}\tilde{\mathbf{J}} = \tilde{\mathbf{J}}\tilde{\mathbf{J}}^{\mathrm{H}}. \tag{6.19}$$

It is possible to find many matrices $(\tilde{\mathbf{J}})_p$ labeled by p that satisfy $\mathbf{J} = (\tilde{\mathbf{J}})_p(\tilde{\mathbf{J}})_p^{\mathrm{H}}$. The first reason for the multiplicity of such matrices is that the choice of $\mathbf{U}$ in Eq. (6.6) is not unique when the eigenvalues are not distinct. In this case, within the subspace associated with each degenerate eigenvalue, the choice of orthonormal basis is not unique. Second, we may define the matrix $\mathbf{\Lambda}^{1/2}$ to be the diagonal matrix whose elements are equal to the negative square roots of the eigenvalues of $\mathbf{\Lambda}$ rather than nonnegative square roots, or we may choose nonnegative square roots for some of them and negative square roots for others. More detailed discussion can be found in Ref. [3]. If we assume $\mathbf{J}$ is both of full rank and has distinct eigenvalues, and we choose only the positive square roots of the eigenvalues, then we can find a unique $\tilde{\mathbf{J}}$.

The *positive semidefinite square-root representation* introduced above provides a way to make our problem linear in $\mathbf{H}$. If we insert two instances of Eq. (6.19) for $\mathbf{J_f}$ and $\mathbf{J_g}$, Eq. (6.16) can be written as

$$\tilde{\mathbf{J}}_{\mathbf{g}}\tilde{\mathbf{J}}_{\mathbf{g}}^{\mathrm{H}} = \mathbf{H}\mathbf{J}_{\mathbf{f}}\mathbf{J}_{\mathbf{f}}^{\mathrm{H}}\mathbf{H}^{\mathrm{H}}. \tag{6.20}$$

One solution of this equation is

$$\tilde{\mathbf{J}}_{\mathbf{g}} = \mathbf{H}\tilde{\mathbf{J}}_{\mathbf{f}}. \tag{6.21}$$

The last system of equations can be solved to obtain the linear optical system $\mathbf{H}$ required to obtain an optical field with the desired mutual intensity matrix $\mathbf{J_g}$ from a given field characterized by $\mathbf{J_f}$.

There remains the problem of efficiently implementing the system represented by $\mathbf{H}$. We propose to use fractional Fourier domain-filtering configurations for this purpose. In the following section we will briefly introduce these configurations and how they can be used to implement the system matrix $\mathbf{H}$.

6.4.1 Fractional Fourier domain-filtering circuits

In this section, we introduce the concept of filtering circuits in fractional Fourier domains. This configuration includes the multistage (repeated) and multichannel (parallel) filtering configurations that are generalizations of the single domain-filtering configuration.

The general single-stage transform domain-filtering configuration is shown in Fig. 6.2(a). According to this configuration, the output is obtained by multiplying the input with a filter function $\mathbf{h}$ in the transform domain. The overall system is characterized by

$$\mathbf{T} = \mathbf{S}^{-1}\mathbf{\Lambda}_{\mathbf{h}}\mathbf{S}, \tag{6.22}$$

where $\mathbf{S}$ is a transform and $\mathbf{\Lambda}_{\mathbf{h}}$ corresponds to a multiplication with the filter function $\mathbf{h}$. $\mathbf{T}$ can be implemented efficiently if the transform $\mathbf{S}$ has efficient implemen-

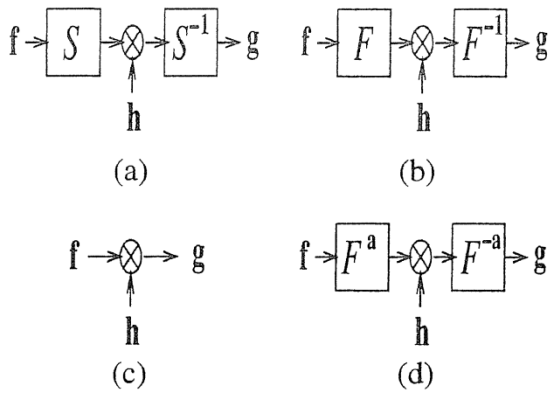

Figure 6.2 (a) Single-stage transform domain filtering. (b) Fourier domain filtering. (c) Time (space) domain filtering. (d) Fractional Fourier domain filtering.

tation. A time-invariant system is a special case with the transform $\mathbf{S}$ equal to the ordinary Fourier transform [Fig. 6.2(b)]. Another special case may be obtained by using the identity transform ($\mathbf{S} = \mathbf{I}$); in this case, we have the time or space domain filtering for which the output is obtained by simply masking the input with a window function $\mathbf{h}$ [Fig. 6.2(c)].

If we choose the transform in Eq. (6.22) as the fractional Fourier transform ($\mathbf{S} = \mathbf{F}^a$), we obtain the single-stage fractional Fourier domain filter [Fig. 6.2(d)]. In this case the overall system is given by

$$\mathbf{T}_{\mathrm{ss}} = \mathbf{F}^{-a}\mathbf{\Lambda}_{\mathbf{h}}\mathbf{F}^{a}. \tag{6.23}$$

This configuration interpolates between the time-domain and frequency-domain filtering configurations and enables significant improvements in signal restoration and denoising.[9–12]

The ath-order fractional Fourier transform[9,15–20] of $f(x)$ is denoted by $\mathcal{F}^a f(x)$. Then $\mathcal{F}^0 f(x) = f(x)$ is the function itself, $\mathcal{F}^1 f(x) = F(\nu)$ is the ordinary Fourier transform, and $\mathcal{F}^{a_2}\mathcal{F}^{a_1} = \mathcal{F}^{a_2+a_1}$. In the discrete case, the ath-order fractional Fourier transform $\mathbf{f}_a$ of a vector $\mathbf{f}$ can be obtained by

$$\mathbf{f}_a = \mathbf{F}^a\mathbf{f},$$

where $\mathbf{F}^a$ represents the ath-order fractional Fourier transform matrix.[21,22] A comprehensive treatment of this transform and an extensive list of references may be found in Refs. [13] and [14].

In the multistage filtering configuration shown in Fig. 6.3, M single-stage fractional Fourier domain filters are combined in series.[9,23,24] The input is first transformed into the a_1th domain, where it is multiplied by a filter $\mathbf{h}_1$. The result is then transformed back into the original domain. This process is repeated M times consecutively. (Notice that this amounts to sequentially visiting the domains a_1, a_2, a_3, etc., and applying a filter in each.) It has been shown in Ref. [24] that, by

modifying the filters $\mathbf{h}_k$ appropriately, the repeated configuration can be reduced to one involving only ordinary Fourier transforms. However, the modified filters often exhibit oscillatory behavior, so this reduction is not necessarily beneficial in practice. Another point with this configuration is that the back transform of stage k with order a_k may be combined with the forward transform of stage $k+1$ with order a_{k+1}, resulting in a single transform of order $a_{k+1} - a_k$. Thus, the system consists of multiplicative filters sandwiched between fractional transform stages of order $a'_k = a_{k+1} - a_k$.

Let $\mathbf{\Lambda}_{\mathbf{h}_k}$ denote the operator corresponding to multiplication by the filter function $\mathbf{h}_k$. The overall operator $\mathbf{T}_{\text{ms}}$ corresponding to the multistage configuration is given by

$$\mathbf{T}_{\text{ms}} = \left(\mathbf{F}^{-a_M}\mathbf{\Lambda}_M \ldots \mathbf{F}^{a_2-a_1}\mathbf{\Lambda}_{\mathbf{h}_1}\mathbf{F}^{a_1}\right)\mathbf{f}, \tag{6.24}$$

and the output $\mathbf{g}_s$ is related to input as

$$\mathbf{g}_s = \mathbf{T}_{\text{ms}}\mathbf{f}. \tag{6.25}$$

A dual configuration to the multistage filtering is the multichannel filtering.[25,26] In this configuration we combine the M single-stage fractional Fourier domain filters in parallel (Fig. 6.4). The input is first divided into M channels. Then, for each channel k, the input is transformed to the a_kth domain, multiplied with a filter $\mathbf{h}_k$, and then transformed back. The output is obtained by summing the results of each channel.

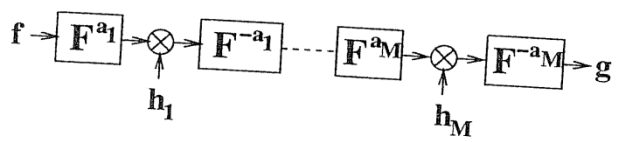

Figure 6.3 Multistage (serial) filtering configuration.

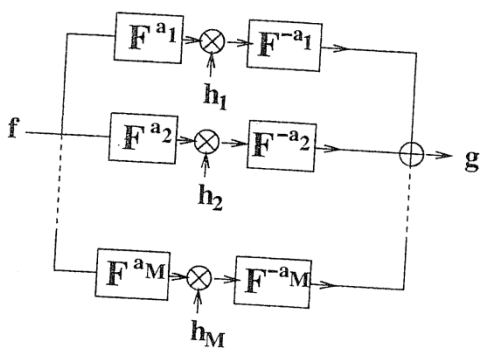

Figure 6.4 Multichannel (parallel) filtering configuration.

The overall operator $\mathbf{T}_{\mathrm{mc}}$ corresponding to the multichannel configuration is given by

$$\mathbf{T}_{\mathrm{mc}} = \sum_{k=1}^{M} \mathbf{F}^{-a_k} \mathbf{\Lambda}_{\mathbf{h}_k} \mathbf{F}^{a_k}, \tag{6.26}$$

and the output $\mathbf{g}_p$ is related to input as

$$\mathbf{g}_p = \mathbf{T}_{\mathrm{mc}} \mathbf{f}. \tag{6.27}$$

Both multistage and multichannel filtering configurations have at most $MN + M$ degrees of freedom. Their digital implementation will take $O(MN \log N)$ time since the fractional Fourier transform can be implemented in $O(N \log N)$ time.[21] Optical implementation will require an M-stage or M-channel optical system, each with space-bandwidth product N. These configurations interpolate between general linear systems and shift-invariant systems in terms of both cost and flexibility.

It is helpful to clearly distinguish the two different ways in which these configurations can be used in a given application:

1. Starting with a recovery or synthesis problem, we determine the optimal matrix $\mathbf{H}$ using any models and methods considered appropriate. Then we seek the transform orders a_k and filters $\mathbf{h}_k$ such that the overall multistage or multichannel filtering configuration matrix ($\mathbf{T}_{\mathrm{ms}}$ or $\mathbf{T}_{\mathrm{mc}}$) is as close as possible to $\mathbf{H}$ according to some specified criterion, for example, in the minimum Frobenious norm sense.
2. We take Eq. (6.24) or (6.26) as a constraint on the form of the matrix to be employed. Given a specific optimization criterion such as minimum mean square error, we find the optimal values of a_k and $\mathbf{h}_k$ subject to this constraint.

In the multichannel case, the problem of determining the optimal filters can be exactly solved for both of the above approaches since the overall configuration matrix depends linearly on the elements of the filter vectors $\mathbf{h}_k$.[26] In the case of multistage configurations, $\mathbf{T}_{\mathrm{ms}}$ depends nonlinearly on the elements of the filter vectors $\mathbf{h}_k$, and the resulting nonlinear optimization problem is much more difficult. Nevertheless, an iterative approach has been successfully applied to this problem.[23,24]

6.4.2 Synthesis algorithm

In order to implement the desired matrix $\mathbf{H}$, which satisfies Eq. (6.21), we can employ both of the approaches discussed in the previous section. Using approach (1), we can first solve Eq. (6.21) by standard techniques such as pseudo-inverse and least-squares methods;[3] then we may synthesize the resulting matrix $\mathbf{H}$ in the

form of fractional Fourier domain filtering configurations. Or we may employ approach (2) by directly inserting the form to Eq. (6.21) and finding the optimal filter coefficients and orders. For instance, in the multichannel configuration, the problem is to find the optimal filter coefficients that minimize the error:

$$\sigma_e^2 = \|\tilde{\mathbf{J}}_\mathbf{g} - \mathbf{T}\tilde{\mathbf{J}}_\mathbf{f}\|_F^2 = \left\| \tilde{\mathbf{J}}_\mathbf{g} - \left(\sum_{k=1}^{M} \mathbf{F}^{-a_k} \mathbf{\Lambda}_k \mathbf{F}^{a_k} \right) \tilde{\mathbf{J}}_\mathbf{f} \right\|_F^2 . \tag{6.28}$$

Here, $\|\cdot\|_F^2$ denotes the Frobenious norm.

Overall the mutual intensity synthesis problem can be solved by the following algorithm:

- Given the desired mutual intensity function $\mathbf{J}_\mathbf{g}$ and the input mutual intensity function $\mathbf{J}_\mathbf{f}$, find the square-root representations using the singular-value decomposition: $\tilde{\mathbf{J}}_\mathbf{f} = \mathbf{U}_\mathbf{f}\mathbf{\Lambda}_\mathbf{f}^{1/2}\mathbf{U}_\mathbf{f}^\mathrm{H}$ and $\tilde{\mathbf{J}}_\mathbf{g} = \mathbf{U}_\mathbf{g}\mathbf{\Lambda}_\mathbf{g}^{1/2}\mathbf{U}_\mathbf{g}^\mathrm{H}$, where $\mathbf{J}_\mathbf{f} = \mathbf{U}_\mathbf{f}\mathbf{\Lambda}_\mathbf{f}\mathbf{U}_\mathbf{f}^\mathrm{H}$ and $\mathbf{J}_\mathbf{g} = \mathbf{U}_\mathbf{g}\mathbf{\Lambda}_\mathbf{g}\mathbf{U}_\mathbf{g}^\mathrm{H}$;
- Form the equation $\tilde{\mathbf{J}}_\mathbf{g} = \mathbf{H}\tilde{\mathbf{J}}_\mathbf{f}$ and solve for $\mathbf{H}$ using well-known linear inverse problem solution techniques.[3] If no solution exists (which means that the field specified to be synthesized is in fact physically unrealizable), solve the problem in the least-squares sense to obtain the closest physically realizable field. Synthesize the desired kernel in the form of fractional Fourier domain-filtering circuits using the solutions described in Refs. [23] and [26];
  or
- Find the fractional Fourier domain-filtering circuit that minimizes the error $\|\tilde{\mathbf{J}}_\mathbf{g} - \mathbf{T}\tilde{\mathbf{J}}_\mathbf{f}\|_F^2$, where $\mathbf{T}$ corresponds to the overall filtering configuration matrix for single-stage, multistage, or multichannel fractional Fourier domain-filtering configurations, using the procedures described in Refs. [24]–[26].

We note that the solution clearly depends on the choice of matrices $\tilde{\mathbf{J}}_\mathbf{f}$ and $\tilde{\mathbf{J}}_\mathbf{g}$, which, as we have noted, are not unique. We can find other matrices $(\tilde{\mathbf{J}}_\mathbf{f})_2$ and $(\tilde{\mathbf{J}}_\mathbf{g})_2$ that satisfy Eq. (6.18). Since one may be implemented more efficiently than the other, we are actually not exploiting all possible room for improvement.

In this section, we formulated the mutual intensity synthesis problem and proposed a solution that reduces this quadratic problem into a linear one. The main point is that the system that satisfies Eq. (6.21) can be used to synthesize the desired mutual intensity function from an input mutual intensity function. However, as noted, there may be many such equations with different positive semidefinite roots. One solution may be implemented efficiently by using fractional Fourier domain-filtering configurations. Therefore, it may be advantageous to further optimize over the whole set of possible solutions, a task which is not undertaken in this chapter.

6.5 Examples

In this section we will give some computer simulations illustrating the mutual intensity synthesis problem.

First we will consider the synthesis of a field described by its coherent-mode expansion from an incoherent source. Then we will consider the synthesis of a field from another field, again described by its coherent-mode expansion. The mutual intensity functions in the examples are represented by the superposition of Hermite-Gaussian modes

$$J_g(x_1, x_2) = \sum_{n=0}^{\infty} \lambda_n \psi_n(x_1) \psi_n^*(x_2), \tag{6.29}$$

where $\psi_n(\cdot)$ is the nth-order Hermite-Gaussian function. For computer simulations, the above function is discretized using the definition of the discrete Hermite-Gaussian functions[22]:

$$\mathbf{J_g} = \sum_{n=0}^{N-1} \lambda_n \boldsymbol{\psi}_n \boldsymbol{\psi}_n^{\mathrm{H}}. \tag{6.30}$$

Here, $\boldsymbol{\psi}_n$ is the n-th order discrete Hermite-Gaussian vector of length N, defined in Ref. [22]. Since the discrete Hermite-Gaussian vectors are orthonormal to each other, we have

$$\boldsymbol{\psi}_m^{\mathrm{H}} \boldsymbol{\psi}_n = \delta_{nm},$$

and the expansion in Eq. (6.30) corresponds to the coherent-mode expansion of $\mathbf{J_g}$. We want to synthesize such a beam from an incoherent source whose mutual intensity function is given by $J_f(x_1, x_2) = p(x_1)\delta(x_1 - x_2)$ in continuous time, and

$$\mathbf{J_f} = \mathbf{\Lambda_f}, \tag{6.31}$$

in discrete time, where $\mathbf{\Lambda_f}$ is a diagonal matrix.

Example 1

In our first example, the expansion coefficients λ_n in Eq. (6.30) are chosen as plotted in Fig. 6.5(a) with $N = 64$. With this choice, the mutual intensity matrix $\mathbf{J_g}$ is full rank, has no degenerate eigenvalues, and is shown in Fig. 6.5(b). The mutual intensity of the incoherent source is taken to be the identity matrix $\mathbf{J_f} = \mathbf{I}$. The positive semidefinite roots are then given by:

$$\tilde{\mathbf{J}}_{\mathbf{f}} = \mathbb{I}, \quad \tilde{\mathbf{J}}_{\mathbf{g}} = \sum_{n=0}^{N-1} \lambda_n^{1/2} \boldsymbol{\psi}_n \boldsymbol{\psi}_n^{\mathrm{H}}. \tag{6.32}$$

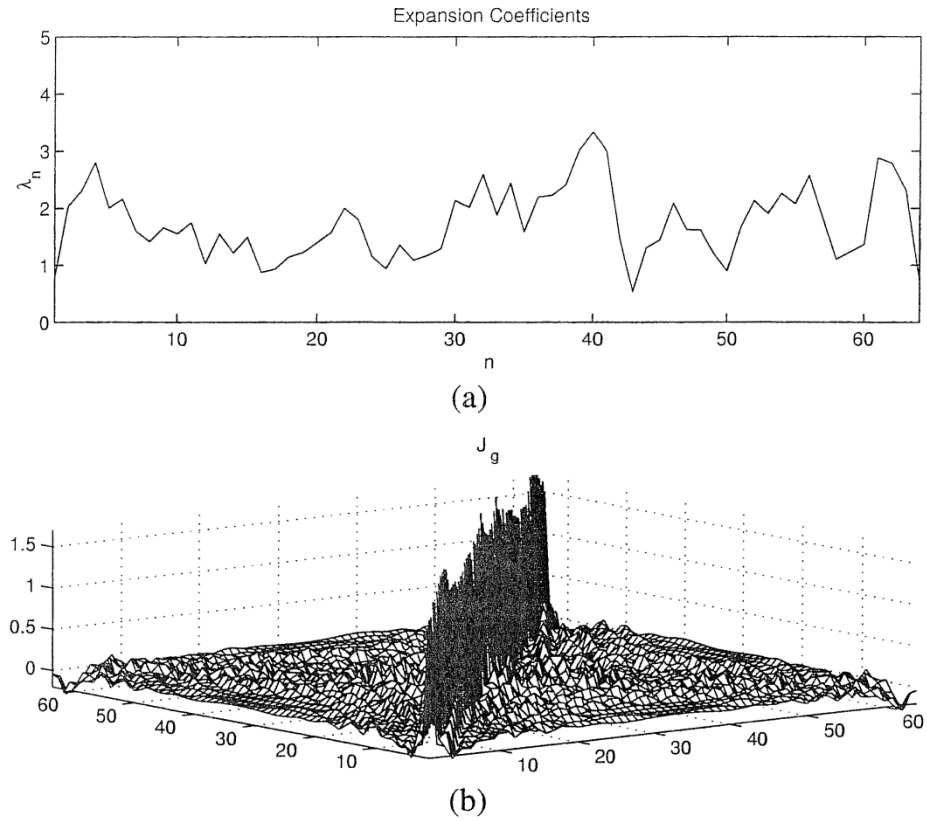

Figure 6.5 (a) The expansion coefficients appearing in Eq. (6.30) used for Example 1. (b) Mesh plot of the desired mutual intensity function $\mathbf{J_g}$.

The desired system kernel $\mathbf{H}$, which satisfies $\tilde{\mathbf{J}}_\mathbf{g} = \mathbf{H}\tilde{\mathbf{J}}_\mathbf{f}$, is then simply given by $\mathbf{H} = \tilde{\mathbf{J}}_\mathbf{g}$. When we synthesize this desired $\mathbf{H}$ in the form of a single-stage filter, the normalized error, which is defined as

$$\varepsilon_\mathrm{H} = \frac{\|\mathbf{T} - \mathbf{H}\|_F^2}{\|\mathbf{H}\|_F^2}, \tag{6.33}$$

turns out to be 22% in the optimum domain $a = 0.4$. For the multichannel filtering configuration with $M = 4$ filters, the normalized error is 4%, and for the multistage configuration with $M = 4$ filters, it is 3% ($a_1 = 0.25$, $a_2 = 0.5$, $a_3 = 0.75$, and $a_4 = 1$ for both configurations). The normalized errors

$$\varepsilon_\mathrm{mut} = \frac{\|\mathbf{J_g} - \mathbf{T}\mathbf{J_f}\mathbf{T}^\mathrm{H}\|_F^2}{\|\mathbf{J_g}\|_F^2}, \tag{6.34}$$

in the synthesis of $\mathbf{J_g}$ are then 34%, 7%, and 6% for the single-stage, multichannel ($M = 4$), and multistage ($M = 4$) configurations, respectively. The synthesized mutual intensity functions are plotted in Fig. 6.6.

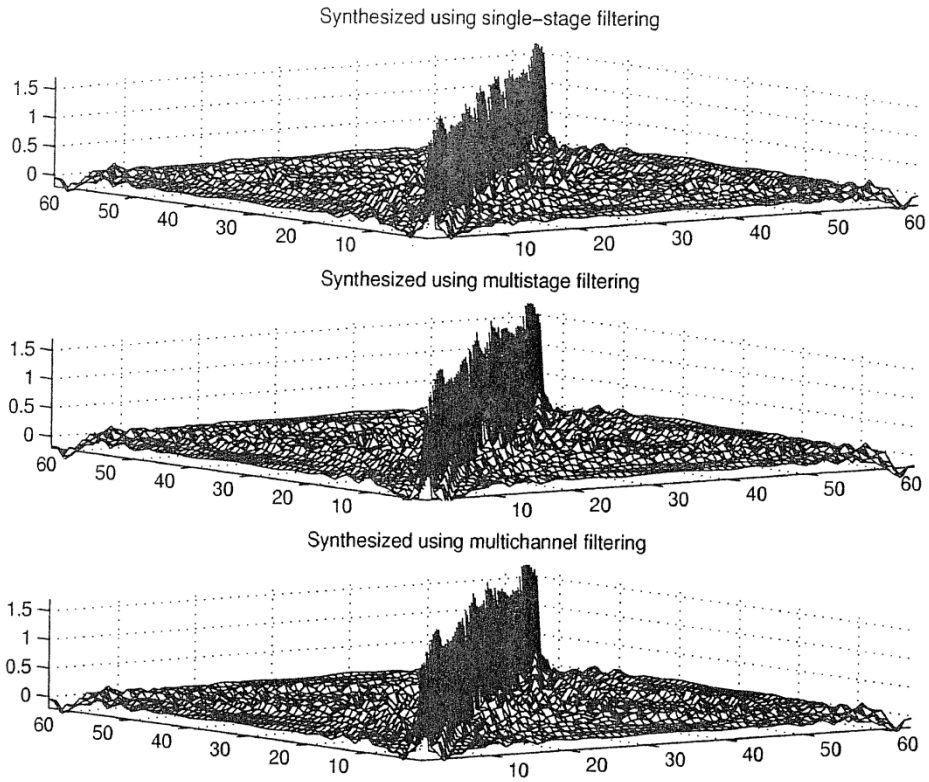

Figure 6.6 (a) Synthesized mutual intensity function using single-stage filtering. (b) Synthesized mutual intensity function using multistage filtering ($M = 4$). (c) Synthesized mutual intensity function using multichannel filtering ($M = 4$).

We can also take approach (2) and directly find the optimal fractional Fourier domain-filtering configuration by minimizing the error $\|\tilde{\mathbf{J}}_{\mathbf{g}} - \mathbf{T}\tilde{\mathbf{J}}_{\mathbf{f}}\|_F^2$. But since $\mathbf{J}_{\mathbf{f}}$ is the identity matrix and $\mathbf{H} = \mathbf{J}_{\mathbf{g}}$, this approach would yield the same result as above.

To illustrate the cost performance trade-off in this problem, we have plotted the number of filters versus error plot for multistage (repeated) and multichannel configurations in Fig. 6.7.

Example 2

In the second example, we consider the problem of synthesizing a field from another field when both are described by coherent-mode expansion. The expansion coefficients of the given beam and the desired (to be synthesized) beam are plotted in Fig. 6.8. With these choices of coefficients, $\mathbf{J}_{\mathbf{f}}$ is of rank $R = 50$ and $\mathbf{J}_{\mathbf{g}}$ is of rank $R = 60$; both have degenerate eigenvalues. Since $\mathbf{J}_{\mathbf{g}}$ has a rank greater than that of $\mathbf{J}_{\mathbf{f}}$, no system $\mathbf{H}$ exists that exactly satisfies $\mathbf{J}_{\mathbf{g}} = \mathbf{H}\mathbf{J}_{\mathbf{f}}\mathbf{H}^{\mathrm{H}}$. We are seeking $\mathbf{H}$ in the form of a fractional Fourier domain filter that minimizes the Frobenious norm between the synthesized and desired mutual intensity functions. Since $\mathbf{J}_{\mathbf{f}}$ is of

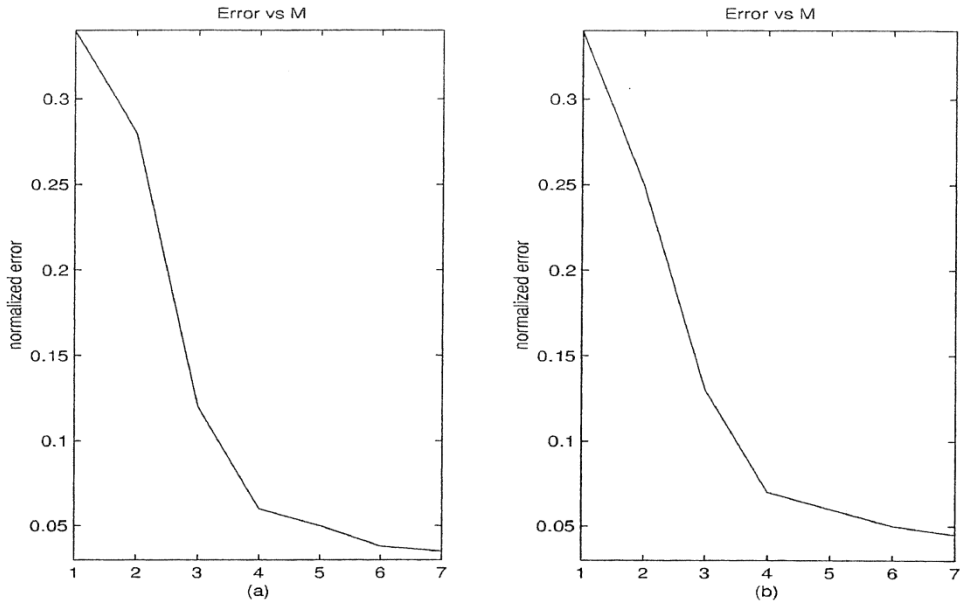

Figure 6.7 Normalized error versus number of filters for (a) multistage case; and (b) multichannel case.

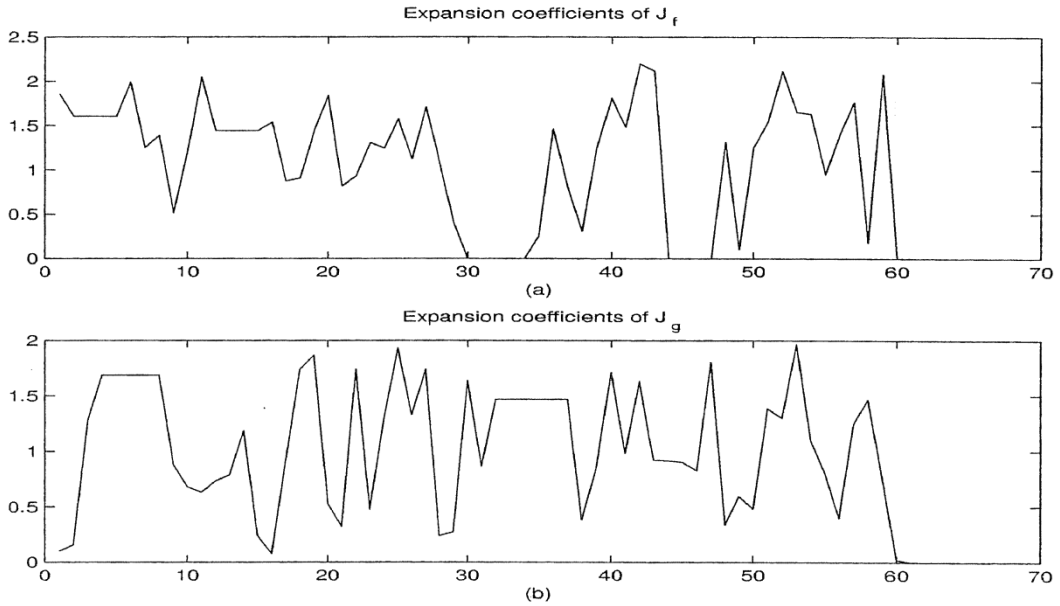

Figure 6.8 The expansion coefficients of the (a) given beam $\mathbf{J_f}$; and (b) desired beam $\mathbf{J_g}$.

rank $R = 50$, we cannot achieve a synthesized mutual intensity function of a rank greater than $R = 50$. On the other hand, we know that the best rank-50 approximation of $\mathbf{J_g}$ (in the Frobenious-norm sense) is achieved by keeping the largest 50 eigenvalues of $\mathbf{J_g}$ and discarding the others. Thus, our problem in this example

reduces to synthesizing $\hat{\mathbf{J}}_\mathbf{g}$ from $\mathbf{J}_\mathbf{f}$, where $\hat{\mathbf{J}}_\mathbf{g}$ is the rank-50 approximation of $\mathbf{J}_\mathbf{g}$ obtained by keeping the largest 50 expansion coefficients.

The desired system kernel $\mathbf{H}$ that minimizes $\|\tilde{\mathbf{J}}_\mathbf{g} - \mathbf{H}\tilde{\mathbf{J}}_\mathbf{f}\|_F^2$ can be found by solving the associated *normal equations*.[3] When we synthesize this desired $\mathbf{H}$ in the form of a single-stage filter, the normalized error ε_H turns out to be 27% in the optimum domain $a = -0.5$. For the multichannel filtering configuration with $M = 5$ filters, the normalized error is 10%; and for the multistage configuration with $M = 5$ filters, it is 13%. The normalized errors ε_mut in the synthesis of $\mathbf{J}_\mathbf{g}$ are then 48%, 18%, and 21% for the single-stage, multichannel ($M = 5$), and multistage ($M = 5$) configurations, respectively. (In both the multistage and multichannel configurations, we chose $a_1 = 0.2$, $a_2 = 0.4$, $a_3 = 0.6$, $a_4 = 0.8$, and $a_5 = 1$.)

We can also take approach (2) and directly find the optimal fractional Fourier domain-filtering configuration by minimizing the error $\sigma_e^2 = \|\tilde{\mathbf{J}}_\mathbf{g} - \mathbf{T}\tilde{\mathbf{J}}_\mathbf{f}\|_F^2$. For single-stage filtering, the normalized error in the synthesis of $\mathbf{J}_\mathbf{g}$ turns out to be $\varepsilon_\mathrm{mut} = 38\%$, and it is 15% and 17% for the multichannel and multistage filtering configurations, respectively ($M = 4$ for both configurations). The mutual intensity function of the beam synthesized by using multichannel filtering, together with the desired beam, is shown in Fig. 6.9.

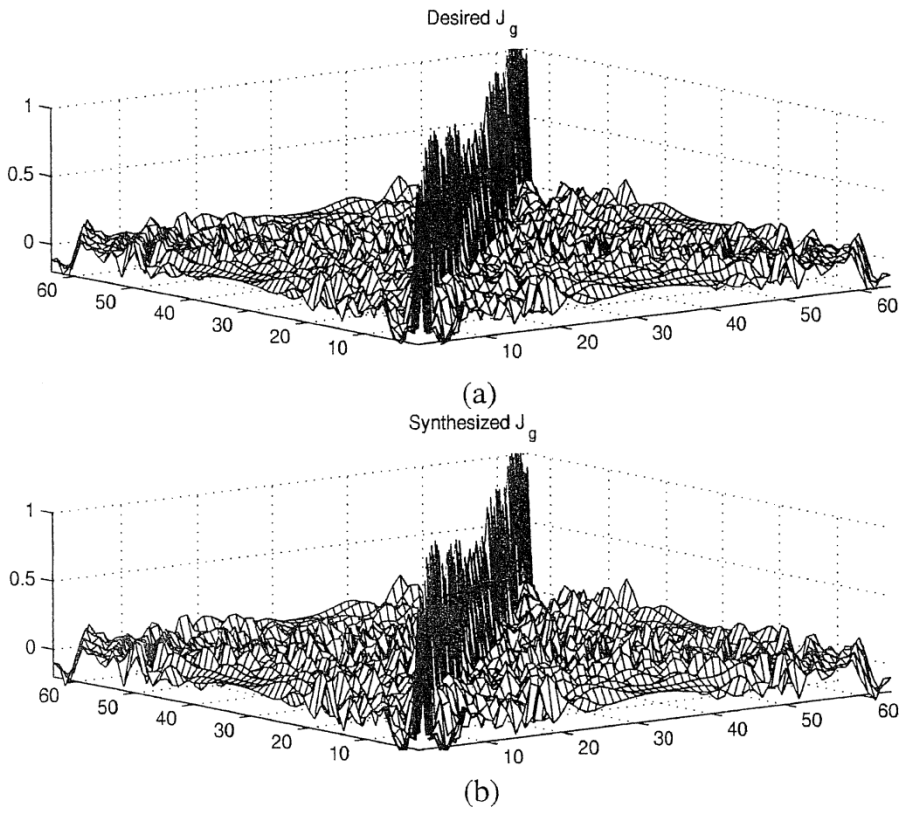

Figure 6.9 The mutual intensity functions of (a) the desired beam; and (b) the synthesized beam.

References

1. J. W. Goodman, *Statistical Optics*, Wiley & Sons, Inc., New York (1985).
2. B. E. A. Saleh and M. C. Teich, *Fundamentals of Photonics*, Wiley & Sons, Inc., New York (1991).
3. G. Strang, *Linear algebra and its applications*, Harcourt Brace Jovanovich, San Diego, California (1988).
4. A. Papoulis, *Probability, Random Variables, and Stochastic Processes*, third edition, McGraw-Hill, New York (1991).
5. T. Habashy, A. T. Friberg, and E. Wolf, "Application of the coherent-mode representation to a class of inverse source problems," *Inverse Problems* Vol. 13, pp. 47–61 (1997).
6. H. M. Ozaktas, S. Yüksel, and M. A. Kutay, "Linear algebraic theory of partial coherence: discrete fields and measures of partial coherence," to appear in *J. Opt. Soc. Am. A* (2002).
7. B. Zhang and B. Lu, "Transformation of Gaussian schell-model beams and their coherent-mode representation," *Journal of Optics* Vol. 27, pp. 99–103 (1996).
8. J. W. Goodman, *Introduction to Fourier optics*, McGraw-Hill, New York (1996).
9. H. M. Ozaktas, B. Barshan, D. Mendlovic, and L. Onural, "Convolution, filtering, and multiplexing in fractional Fourier domains and their relation to chirp and wavelet transforms," *J. Opt. Soc. Am. A* Vol. 11, pp. 547–559 (1994).
10. M. A. Kutay, H. M. Ozaktas, O. Arıkan, and L. Onural, "Optimal filtering in fractional Fourier domains," *IEEE Trans. Sig. Process.* Vol. 45, pp. 1129–1143 (1997).
11. F. M. Erden, H. M. Ozaktas, and D. Mendlovic, "Synthesis of mutual intensity distributions using the fractional Fourier transform," *Opt. Commun.* Vol. 125, pp. 288–301 (1996).
12. M. A. Kutay and H. M. Ozaktas, "Optimal image restoration with the fractional Fourier transform," *J. Opt. Soc. Am. A* Vol. 15, pp. 825–833 (1998).
13. H. M. Ozaktas, Z. Zalevsky, and M. A. Kutay, *The Fractional Fourier Transform with Applications in Optics and Signal Processing*, John Wiley & Sons, New York (2001).
14. H. M. Ozaktas, M. A. Kutay, and D. Mendlovic, "Introduction to the fractional Fourier transform and its applications," in *Advances in Imaging and Electron Physics 106*, Academic Press, San Diego, California, pp. 239–291 (1999).
15. H. M. Ozaktas and D. Mendlovic, "Fourier transforms of fractional order and their optical interpretation," *Opt. Commun.* Vol. 101, pp. 163–169 (1993).
16. H. M. Ozaktas and D. Mendlovic, "Fractional Fourier transforms and their optical implementation: II," *J. Opt. Soc. Am. A* Vol. 10, pp. 2522–2531 (1993).
17. A. W. Lohmann, "Image rotation, Wigner rotation, and the fractional order Fourier transform," *J. Opt. Soc. Am. A* Vol. 10, pp. 2181–2186 (1993).
18. L. B. Almeida, "The fractional Fourier transform and time-frequency representations," *IEEE Trans. Sig. Process.* Vol. 42, pp. 3084–3091 (1994).

19. H. M. Ozaktas and D. Mendlovic, "Fractional Fourier optics," *J. Opt. Soc. Am. A* Vol. 12, pp. 743–751 (1995).
20. H. M. Ozaktas and M. F. Erden, "Relationships among ray optical, Gaussian beam, and fractional Fourier transform descriptions of first-order optical systems," *Opt. Commun.* Vol. 143, pp. 75–86 (1997).
21. H. M. Ozaktas, O. Arikan, M. A. Kutay, and G. Bozdağı, "Digital computation of the fractional Fourier transform," *IEEE Trans. Sig. Process.* Vol. 44, pp. 2141–2150 (1996).
22. Ç. Candan, M. A. Kutay, and H. M. Ozaktas, "The discrete fractional Fourier transform," *IEEE Trans. Sig. Process.* Vol. 48, pp. 1329–1337 (2000).
23. M. F. Erden and H. M. Ozaktas, "Synthesis of general linear systems with repeated filtering in consecutive fractional Fourier domains," *J. Opt. Soc. Am. A* Vol. 15, pp. 1647–1657 (1998).
24. M. F. Erden, M. A. Kutay, and H. M. Ozaktas, "Repeated filtering in consecutive fractional Fourier domains and its application to signal restoration," *IEEE Trans. Sig. Process.* Vol. 47, pp. 1458–1462 (1999).
25. M. A. Kutay, M. F. Erden, H. M. Ozaktas, O. Arıkan, Ö. Güleryüz, and Ç. Candan, "Space-bandwidth-efficient realizations of linear systems," *Opt. Lett.* Vol. 23, pp. 1069–1071 (1998).
26. M. A. Kutay, H. Özaktaş, H. M. Ozaktas, and O. Arıkan, "The fractional Fourier domain decomposition," *Signal Process.* Vol. 77, pp. 105–109 (1999).

OPTICAL INFORMATION PROCESSING

A Tribute to Adolf Lohmann

H. John Caulfield
Editor

SPIE PRESS
A Publication of SPIE—The International Society for Optical Engineering
Bellingham, Washington USA

Library of Congress Cataloging-in-Publication Data

Optical information processing : a tribute to Adolf Lohmann / H. John Caulfield, editor.
p. cm. (SPIE Press monograph ; PM117)
Includes bibliographical references.
ISBN 0-8194-4498-7
1. Optical data processing. I. Lohmann, Adolf W. II. Caulfield, H. J. (Henry John), 1936-
III. Series.

TA1630 .O64138 2002
621.367--dc21 2001060205

Published by

SPIE—The International Society for Optical Engineering
P.O. Box 10
Bellingham, Washington 98227-0010 USA
Phone: (1) 360.676.3290
Fax: (1) 360.647.1445
Email: spie@spie.org
Web: www.spie.org

Printed in the United States of America.